Question	What is the induced current when a 200 Ω resistor is connected to a coil of an induced voltage of 220 V?	
Type	multiple_choice	
Option	0.8 A	incorrect
Option	1.0 A	incorrect
Option	0.75 A	incorrect
Option	1.1 A	correct
Solution	$V_{induced} = I_{induced} \times R$ $220 = I_{induced} \times 200$ $I_{induced} = 1.1$ A	
Marks	4	1

Question	Retentivity is also known as _____	
Type	multiple_choice	
Option	Retained reluctance	incorrect
Option	Residual magnitism	correct
Option	Residual inductance	incorrect
Option	None of these	incorrect
Solution	Retentively is the ability of a substance to retain or resist magnetization, frequently measured as the strength of the magnetic field that remains in a sample after removal of an inducing field. So it is also known as Residual magnetism	
Marks	4	1

Question	When an electric current increases the charge of one plate of the capacitor, what happens to the charge on the other plate?

Type	multiple_choice	
Option	It increases by the same amount	incorrect
Option	It remains the same	incorrect
Option	It decreases by the same amount	correct
Option	It becomes zero	incorrect
Solution	When current increases the charge of one plate increase then it decrease the charge by same amount on other plate.	
Marks	4	1

Question	What is dielectric breakdown?	
Type	multiple_choice	
Option	It is rapid acquisition of infinite amount of resistance by a conductor, thereby becoming a perfect insulator	incorrect
Option	It is a rapid reduction in the resistance of an electrical insulator, thereby becoming electrically conductive	correct
Option	It is when a material becomes half conductor and half insulator	incorrect
Option	None of these	incorrect
Solution	When voltage across an insulator increases beyond the breakdown voltage then current will flow through insulator.	
Marks	4	1

Question	Which of the following is used as the dielectric in electrolytic capacitors?	
Type	multiple_choice	
Option	Niobium	incorrect
Option	Tantalum	incorrect
Option	Aluminum	incorrect
Option	All of the above	correct
Solution	An electrolytic capacitor is a polarized capacitor whose anode or positive plate is made of a metal that forms an insulating oxide layer through ionization. This oxide layer acts as the dielectric of the capacitor. There are three families of electrolytic capacitor- aluminum electrolytic capacitors, tantalum electrolytic capacitors, and niobium electrolytic capacitors.	
Marks	4	1

Question	Which of the following devices can be used to convert energy into linear motion?	
Type	multiple_choice	
Option	Solenoid	incorrect
Option	Solar cell	incorrect
Option	Potentiometer	incorrect
Option	All of the above	correct
Solution	Solenoids basically are electrical devices used to convert electrical energy into linear mechanical motion. The energy produces within a solenoid can either be used to provide a straight linear pulling action, or it may be converted to provide rotary action. In either case the magnetic pull force increases as the air gap is reduced between armature and core.	
Marks	4	1

Question	Which of the following rules is applied when a Wheatstone bridge is used to measure an unknown electrical resistance?	
Type	multiple_choice	
Option	Kirchhoff's current rule	incorrect
Option	Kirchhoff's voltage rule	incorrect
Option	Both A and B	correct
Option	None of these	incorrect
Solution	Kirchhoff's current law which states that current flowing into a node must be equal to current flowing out of it and Kirchhoff's voltage law states that sum of all voltages inside any closed loop in a circuit must be equal to zero. Both the laws are applied to find the resistance S.	
Marks	4	1

Question	Which of the following is a SI unit for power?	
Type	multiple_choice	
Option	Joule per second	incorrect
Option	Watt	incorrect
Option	Both A and B	correct
Option	joule	incorrect
Solution	The SI unit of power is the watt (W), which is equal to Joule per second.	
Marks	4	1

Question	What is one Henry equal to?	
Type	multiple_choice	
Option	Joule/ampere^2	incorrect

Option	Weber/ampere	incorrect
Option	Ohm-sec	incorrect
Option	All of the above	correct
Solution	Li = Nφ $L=\frac{N\phi}{i}=\frac{\text{weber}}{\text{Ampere}}$ $V=L\frac{di}{dt}$ $L=\frac{Vdt}{di}=\text{ohm}-\text{second}$ $\text{Energy}=\frac{1}{2}Li^2$ $L=\frac{2\text{ energy}}{i^2}=\frac{\text{Joule}}{\text{Ampere}^2}$	
Marks	4	1

Question	What is the SI unit for electrical flux?	
Type	multiple_choice	
Option	V-m	incorrect
Option	Nm^2C^{-1}	incorrect
Option	Weber	incorrect
Option	Both A and B	correct
Solution	If the electric field is uniform, the electric flux passing through a surface of vector area S is ΦE=ES=EScosθ where E is the magnitude of the electric field (having units of V/m), S is the area of the surface, and θ is the angle between the electric field lines and the normal (perpendicular) to S. Electric flux has SI units of volt meters (V m), or, equivalently, Newton meters squared per coulomb (N m2 C−1).	
Marks	4	1

Question	What is Immittance?	
Type	multiple_choice	
Option	It is concept combining the Current (I) and admittance	incorrect
Option	It is concept combining the Voltage and Permittivity	incorrect
Option	It is combining the current and voltage	incorrect
Option	It is combining the impedance and admittance	correct
Solution	Immittance is a concept combining the impedance and admittance of a system or circuit. Immittance does not have units since it applies to both impedance and admittance, which have different units.	
Marks	4	1

Question	What is the power factor of the circuit when a current of 8 A flows in the ac circuit when 100 V dc is applied to it whereas it takes 125 V ac to produce the same current?	
Type	multiple_choice	
Option	0.8	correct
Option	0.6	incorrect
Option	0.707	incorrect
Option	0.5	incorrect
Solution	Here, I=8A,Vdc=100V,Vac=125V Pdc = Pac Vdc × I = Vac × I × cosΦ 100 × 8 = 125 × 8 × cosΦ cosΦ = 0.8	
Marks	4	1

Question	A series circuit has 100 resistors, each having resistance of 1 Ω and 1 A current is flowing through this circuit. What will be the current in the circuit when these 100 resistors are connected in parallel?	
Type	multiple_choice	
Option	100 A	incorrect
Option	1000 A	incorrect
Option	10000 A	correct
Option	1 A	incorrect
Solution	Req(series) = 100 × 1 = 100 ohm V = 1 × 100 = 100 V When connected in series Req(parallel) = 1/100 ohm V = IReq 100 = I × 1/100 I = 10000 A	
Marks	4	1

Question	Which of the following has the highest dielectric constant?	
Type	multiple_choice	
Option	Germanium	correct
Option	Vacuum	incorrect
Option	Mica	incorrect
Option	Glass	incorrect
Solution	Dielectric constant at 20 °C Material Dielectric constant Vacuum 1 Glass 5-10 Mica 3-6	

	Germanium 16	
Marks	4	1

Question	Which of the following theorems states that common voltage across parallel branches with different voltage sources can be determined by the relation $V = \frac{(V1 / R1 + V2 / R2 + V3 / R3)}{(1 / R1 + 1 / R2 + 1 / R3)}$	
Type	multiple_choice	
Option	Millman's theorem	correct
Option	Compensation theorem	incorrect
Option	Reciprocity theorem	incorrect
Option	Rodin's theorem	incorrect
Solution	Mill man's theorem (or the parallel generator theorem) is a method to simplify the solution of a circuit. Specifically, mill man's theorem is used to compute the voltage at the ends of a circuit made up of only branches in parallel.	
Marks	4	1

Question	For the network given in figure below, the Thevenin's voltage V_{ab} is 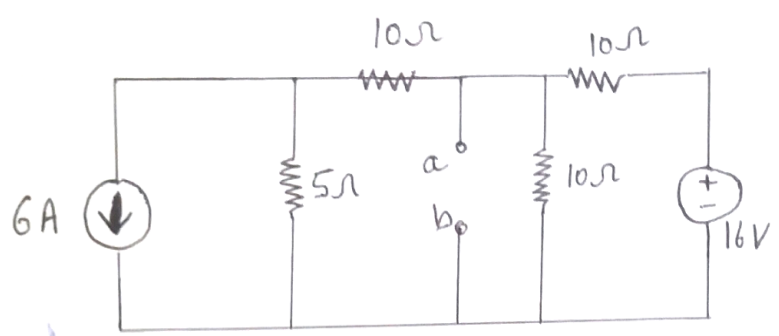 	
Type	multiple_choice	
Option	1.5 V	incorrect

Option	-1.5 V	correct
Option	1 V	incorrect
Option	-1 V	incorrect
Solution	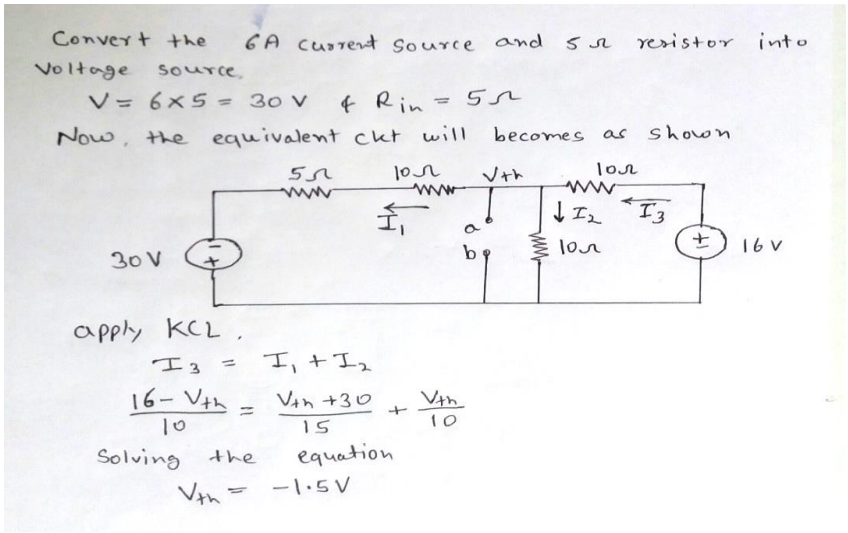	
Marks	4	1

Question	A circuit having a impedance of 10+j5. Then find the conductance.	
Type	multiple_choice	
Option	.08 mho	correct
Option	.8 mho	incorrect
Option	8 mho	incorrect
Option	80 mho	incorrect
Solution	Y=1/Z	
Marks	4	1

Question	The magnitude of magnetic field strength H is independent of	
Type	multiple_choice	
Option	Current only	incorrect
Option	Distance only	incorrect
Option	Permeability of medium only	correct
Option	Both current and distance	incorrect
Solution	**H** = NI/L **H:** Magnetic Field Intensity. **N:** Number of turn in a coil. **L:** Length of the bar. **I:** Current flowing. **H** is independent of permeability of medium.	
Marks	4	1

Question	The resistivity of hard drawn copper at 20 °C is 1.9×10^{-6} Ωm The resistivity of annealed copper compared to hard drawn copper is	
Type	multiple_choice	
Option	Lesser	correct
Option	Slightly larger	incorrect
Option	Same	incorrect
Option	Much larger	incorrect
Solution	Strains produced by mechanical treatment of copper increases its resistivity. Hence, a hard drawn copper wire has higher resistivity than annealed copper. ie. the resistivity of annealed copper compared to hard drawn copper is lesser.	
Marks	4	1

Question	Superconductivity in a material can be destroyed by 1) increasing the temperature above a certain limit. 2) Applying a magnetic field above a certain limit. 3) Passing a current above a certain limit. 4) Decreasing the temperature to a point below the critical temperature Which of the above are correct?	
Type	multiple_choice	
Option	1 and 2 only	incorrect
Option	2 and 3 only	incorrect
Option	1,2 and 3 only	correct
Option	All are correct	incorrect
Solution	Superconductivity in a material can be destroyed by:– i) increasing the temperature of material above transition temperature, T_C ii) applying a magnetic field above a certain limit, called critical field, H_C $H_c = H_0\left[1-\left(\frac{T}{T_c}\right)^2\right]$ iii) Passing a current above a certain limit, I_C. $I_c = 2\pi r H_c$ Where, H_c is critical field, and r is radius of superconductor wire.	
Marks	4	1

Question	The dielectric strength of rubber is 40000 V/ mm at frequency of 50 Hz. What is the thickness of insulation required on an electrical conductor at 33 kV to sustain the breakdown?	
Type	multiple_choice	
Option	0.825 mm	correct
Option	8.25 mm	incorrect
Option	0.0825 mm	incorrect
Option	8.4 cm	incorrect

Solution	Thickness of the insulation required = applied voltage/dielectric strength $33\times10^3/40000$ = 0.825 mm.To sustain the breakdown, the thickness of the insulating material should be more than the thickness calculated above.	
Marks	4	1

Question	The conductivity of insulating materials is called as	
Type	multiple_choice	
Option	residual conductivity	incorrect
Option	dielectric conductivity	incorrect
Option	bipolar conductivity	incorrect
Option	ionic conductivity	correct
Solution	The conductivity (σ) of the insulator is very small but not zero. It is associated with the motion of ions and is therefore called ionic conductivity.	
Marks	4	1

Question	When a very small amount of higher conducting metal is added to a conductor, its conductivity will	
Type	multiple_choice	
Option	Increase	incorrect
Option	Decrease	correct
Option	Remains unchanged	incorrect
Option	Increase and decreased depending on the impurity	incorrect
Solution	Alloying elements invariably decreases the conductivity of the metal to which they are added ie. it does not depend on whether the added metal has higher conductivity or, lower conductivity than the metal to which it is added	
Marks	4	1

Question	The temperature coefficient of resistance of a doped semiconductor is	
Type	multiple_choice	
Option	positive	correct
Option	negative	incorrect
Option	Zero	incorrect
Option	one	incorrect
Solution	Doped semiconductors or an extrinsic semiconductor behaves like conductors.	
Marks	4	1

Question	Permanent magnet loses the magnetic behavior when heated because of 1) atomic vibration 2) dipole vibration 3) realignment of dipoles Which of the above are correct?	
Type	multiple_choice	
Option	1 and 2 only	correct
Option	2 and 3 only	incorrect
Option	1,2 and 3 only	incorrect
Option	All are correct	incorrect
Solution	Permanent magnetism is lost upon heating because of atomic vibrations and dipole vibrations. Due to heat, domains get jumbled and lose their alignment.	
Marks	4	1

Question	The magnetic field required to reduce the residual magnetization to zero is called	
Type	multiple_choice	
Option	Hysteresis	incorrect
Option	Retentivity	incorrect
Option	Coercivity	correct
Option	Saturation	incorrect
Solution	The magnetic field required to reduce the residual magnetization to zero is called ‘coercivity’ This magnetic field is applied externally in the opposite direction. 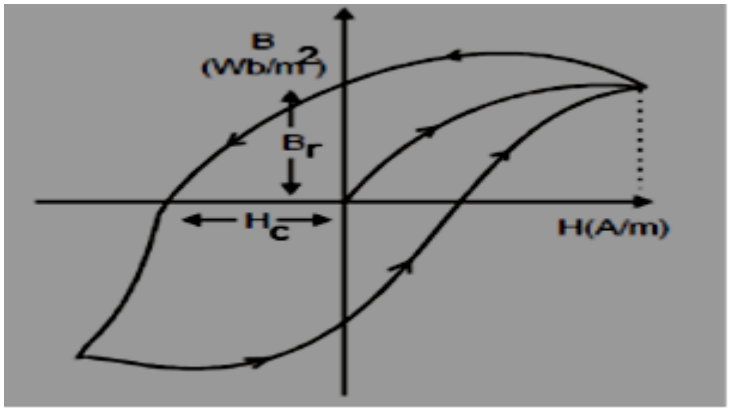 In the B-H curve shown above, B_r is residual magnetization and H_C is coercivity.	
Marks	4	1

Question	The current in a coil changes uniformly from 10 A to 1 A in half a second. A voltmeter connected across the coil gives a reading of 36 V. The self-inductance of the coil is	
Type	multiple_choice	
Option	1 H	incorrect
Option	2 H	correct
Option	3 H	incorrect

Option	4 H	incorrect
Solution	di/dt = 10-1/0.5 = 18 Voltmeter reading is 36 V $\therefore \quad L\frac{di}{dt} = 36$ $L = \frac{36}{18} = 2H$	
Marks	4	1

Question	N resistors each of resistance R when connected in series offer an equivalent resistance of 50Ω and when reconnected in parallel the effective resistance is 2Ω. The value of R is	
Type	multiple_choice	
Option	2.5 Ω	incorrect
Option	5 Ω	incorrect
Option	7.5 Ω	incorrect
Option	10 Ω	correct
Solution	NR = 50 Ω (when connected in series).....(1) R/N = 2 Ω (when connected in Parallel).....(2) multiply equation (1) & (2) NR × R/N = 50x2 R^2 = 100 R = 10 Ω	
Marks	4	1

Question	For a series R-L circuit I(t) = √2 sin(ωt-45º) If, ωL=1Ω The value of R is
Type	multiple_choice

Option	1 Ω	correct
Option	2 Ω	incorrect
Option	3 Ω	incorrect
Option	4 Ω	incorrect
Solution	Here Φ=45º tanΦ= ωL/R tan45º=1/R R=1Ω	
Marks	4	1

Question	In a mutually coupled circuit, the primary current is reduced from 4A to zero in 10 μs . A voltage of 4000 V is observed across the secondary. The mutual inductance between the coils is	
Type	multiple_choice	
Option	100 H	incorrect
Option	10 H	incorrect
Option	5 H	incorrect
Option	0.1 H	correct
Solution	Secondary induced voltage $V_2 = M\frac{dI1}{dt}$ $4000 = M \times \frac{4-0}{10\times10^{-6}}$ M = 0.1 H	
Marks	4	1

Question	The potential difference VAB in the circuit

	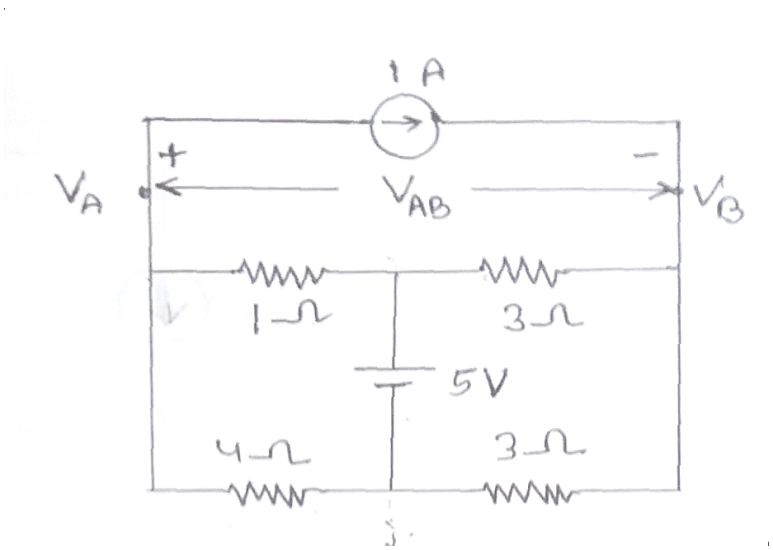	
Type	multiple_choice	
Option	0.8 V	incorrect
Option	5 V	incorrect
Option	-0.8 V	correct
Option	-5 V	incorrect
Solution	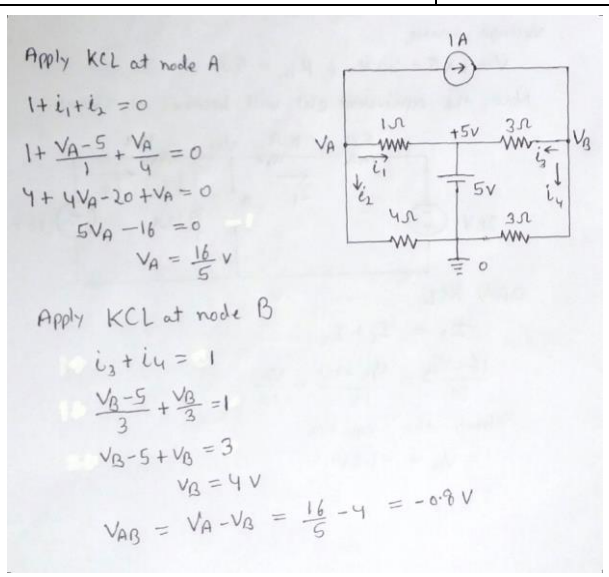	
Marks	4	1

Question	Thevenin's equivalent of a circuit, operating at ω=5 rad/sec has VTh = 3.71 ∠ -15.9º V ZTh = 2.38-j0.667Ω At this frequency, the minimal realization of the Thevenin's impedance will have	
Type	multiple_choice	
Option	A resistor ,a capacitor and an inductor	incorrect
Option	A resistor and a capacitor	correct
Option	A resistor and an inductor	incorrect
Option	A capacitor and an inductor	incorrect
Solution	Given Zth = 2.38 – j0.667 Ω Here R = 2.38 and X = – 0.667 This represents a capacitance (as it is negative).	
Marks	4	1

Question	The current i(t) through a 10 Ω resistor in series with an inductance is given by I(t)= 3 + 4sin(100t+45º) + 4sin(300t+60º) A The RMS value of the current and the power dissipated in the circuit are respectively	
Type	multiple_choice	
Option	5A and 150 W	incorrect
Option	11A and 250 W	incorrect
Option	5A and 250 W	correct
Option	11A and 150 W	incorrect

Solution	$i_{rms} = \sqrt{(3)^2 + \frac{1}{2}[(4)^2 + (4)^2]}$ $i_{rms} = \sqrt{25}$ $i_{rms} = 5\ A$ Power dissipated $= i_{rms}^2 R$ $= (5)^2 \times 10$ $= 250\ W$	
Marks	4	1

Question	Thevenin's equivalents of the network in Figure are 10 V and 2 Ω. If a resistance of 3 Ω is connected across terminals AB what are Thevenin's equivalents?  	
Type	multiple_choice	
Option	10 V and 1.2 Ω	incorrect
Option	10 V and 3 Ω	incorrect
Option	6 V and 3 Ω	incorrect
Option	6 V and 1.2 Ω	correct
Solution	According to question figure 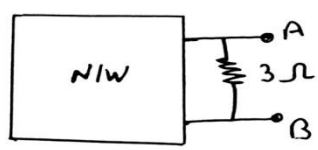 Now,	

	apply voltage devider $V_3 = 10 \times \frac{3}{3+2}$ $= 6V$ To, find R_{th} 10V source is Short Circuit Now, $2 \parallel 3$ $R_{th} = 1.2\ \Omega$ 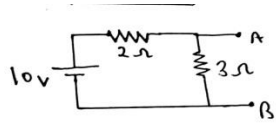 	
Marks	4	1

Question	A voltage source, connected to a load, has an e.m.f. of 10V and an impedance of (500+j100) Ω. The maximum power that can be transferred to the load is	
Type	multiple_choice	
Option	0.05 W	correct
Option	1 W	incorrect
Option	0.1	incorrect
Option	0.5 W	incorrect
Solution	Maximum power = $\frac{\text{Vth}^2}{4\text{Rth}}$ Vth= 10 V Rth = real part of (500+j100)Ω so, Rth = 500 Ω maximum Power transfer is $=\frac{\text{Vth}^2}{4\text{Rth}} = \frac{10\text{x}10}{4\text{x}500}$ Pmax = 1/20 = 0.05 W	
Marks	4	1

Question	Consider the following values for the circuit shown below: 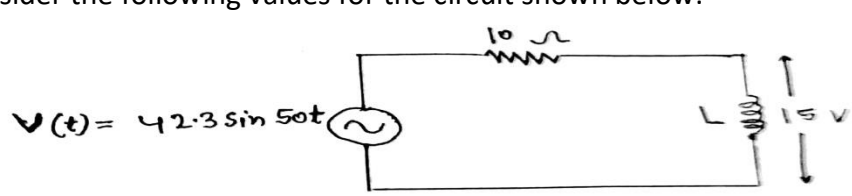

	1. VR = 26 Volt 2. I = 2.6 Amp 3. L = 0.115 H Which of the above values are correct?	
Type	multiple_choice	
Option	1 and 2 only	incorrect
Option	2 and 3 only	incorrect
Option	2 only	incorrect
Option	All are correct	correct
Solution	$V_m = 42.3$ volt $V_{rms} = \frac{42.3}{\sqrt{2}} = 30$ Volt $V_R = \sqrt{V^2 - V_L^2}$ $= \sqrt{(30)^2 - (15)^2} = 25.98 \simeq 26$ V $I_R = \frac{26}{10} = 2.6$ A $V_L = I \times 2\pi f L$ $15 = 2.6 \times 50 \times L$ $L = 0.115$ H	
Marks	4	1

Question	In a parallel resistive circuit, opening a branch results in 1) increase in total resistance 2) decrease in total power 3) no change in total voltage and branch voltage	
Type	multiple_choice	
Option	1 and 2 only	incorrect
Option	2 and 3 only	incorrect
Option	2 only	incorrect
Option	1,2and 3	correct
Solution	In a parallel resistive circuit, opening a branch results in 1) increase in total resistance 2) decrease in total power	

	3) no change in total voltage and branch voltage	
Marks	4	1

Question	The precision resistors are	
Type	multiple_choice	
Option	Carbon resistor	incorrect
Option	Wire-wound resistor	correct
Option	Resister with positive temperature coefficient	incorrect
Option	Resister with negative temperature coefficient	incorrect
Solution	The precision resistor are always wire-wound but the general-purpose resistors may be wire-wound and carbon-composition type	
Marks	4	1

Question	Which one of the following conditions will be correct when three identical bulbs forming a star are connected to a three-phase balanced supply?	
Type	multiple_choice	
Option	The bulb in R phase will be the brightest	incorrect
Option	The bulb in Y phase will be the brightest	incorrect
Option	The bulb in B phase will be the brightest	incorrect
Option	All the bulbs will equally bright	correct
Solution	Since all the bulbs are connected in star so line current will be same for all the bulbs.	
Marks	4	1

Question	Find the Norton's equivalents of the following circuit 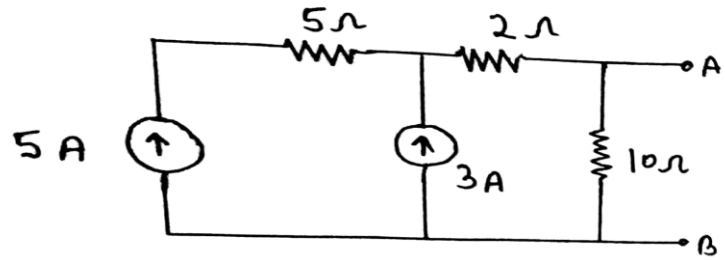	
Type	multiple_choice	
Option	70/17 ohm, 5 A	incorrect
Option	10 ohm, 8 A	correct
Option	18 ohm, 3 A	incorrect
Option	10 ohm, 5 A	incorrect
Solution	To, find R_N, open circuit all current source 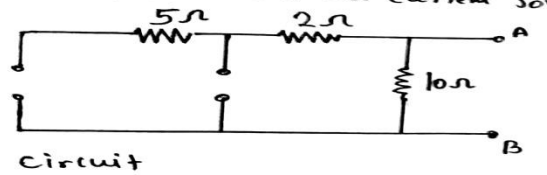 from circuit $R_N = 10\,\Omega$ To fing I_n short circuit the terminal AB and calculate the current through it 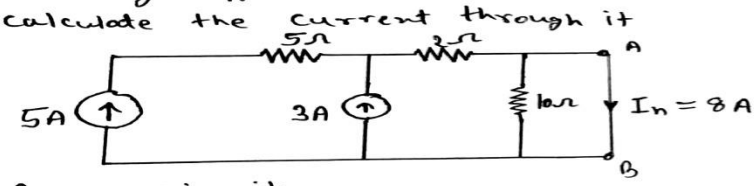 from circuit, $I_n = 5 + 3 = 8$ A	
Marks	4	1